Shelters Solutions

Shelter RE3 – One-sided, RAL

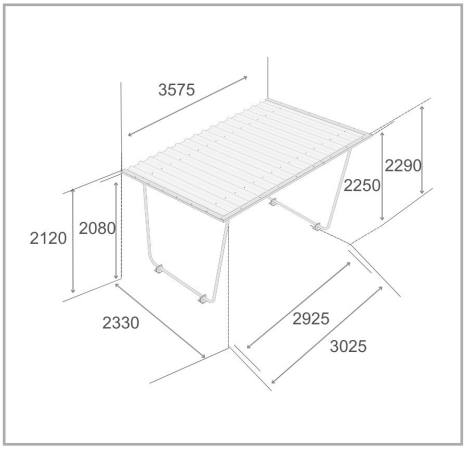

The Shelter RE Series is a practical and affordable solution for weather protection and storage. Each shelter is made with a strong, galvanised steel frame and a sloped, weatherproof metal roof that keeps rain and sun out. The design is simple, durable, and made to last. The RE series is designed to be flexible and adaptable. It is available in different sizes and configurations, with one-sided or two-sided options depending on your space and requirements. For larger needs, extension units can be added to increase the covered area, allowing you to customize the shelter to your exact needs. Side and back walls can be fitted with troughed sheet metal or polyester panels for added protection, giving you control over how much coverage and shelter you need. All Shelter RE models come as complete self-assembly kits with dowelling included, making installation easy and straightforward. Whether you are an industrial site, a small business, or a private homeowner, the RE series offers a cost-effective, reliable, and flexible solution. Its modular design also means you can expand or adjust your shelter over time, creating larger or more complex covered areas as your needs grow.

- Strong galvanised steel frame
- Sloped, weatherproof metal roof
- One-sided or two-sided design options
- Extendable with extra units
- Optional side and back wall panels
- Supplied as an easy self-assembly kit

Technical Data

R&R Item Number	RR103547
EAN / GTIN	7350168260659
Product Type	Shelter RE
Height	2250 mm
Depth	2330 mm
Width	2975 mm
Weight	212 kg
Clear Height	2000 mm
Clear Depth	2200 mm
Roof Cover	Troughed sheet
Configuration	One-sided
Back Wall Type	Troughed sheet
Side Wall Type	Troughed sheet
Profiles Material	Steel
Color	RAL
Surface	Hot-dip galvanised & Powder coated
Base Area	6,40 m²
Max. Snow Load	0,75 kn/qm
Construction	Screwed / assembly kit

Scan Me

The completeness and accuracy of the data and illustrations cannot be guaranteed.
Specifications subject to change without notice. Verify critical dimensions on the site before installation and ordering

R&R Solutions AB
434 37 Kungsbacka, Sweden
www.rr-solutions.se
info@rr-solutions.se

R&R NORDIC
YOUR SMART SOLUTIONS