Bicycle Parking Solutions

Bike Rack Economy R4S for 2 Bikes

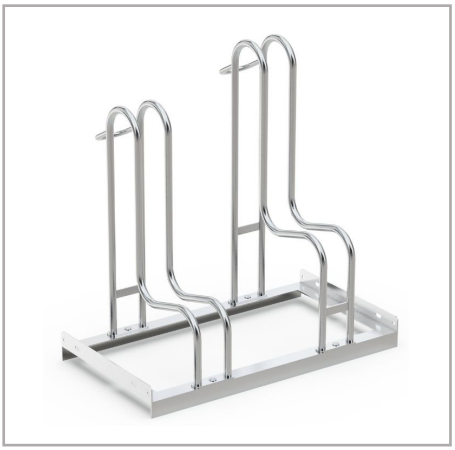

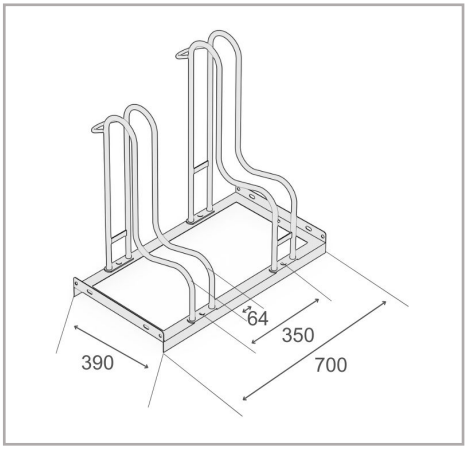

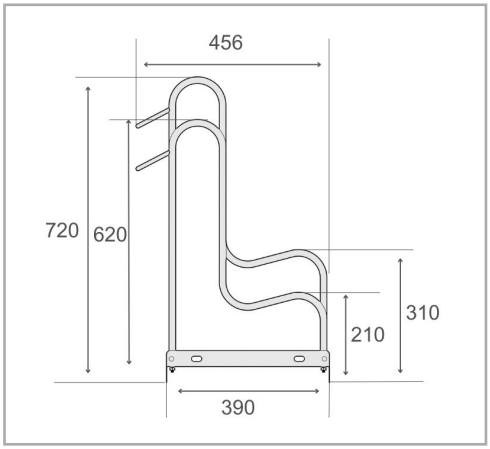

The Bike Rack Economy R4S is designed for efficient bicycle parking with 350 mm spacing between bikes. The single-sided design provides a practical parking solution while making efficient use of available space. The low-high design allows handlebars to overlap and saves space. The rack can also be extended in a row using connecting elements to create additional parking spaces. It is made from durable, corrosion-protected steel and is suitable for tyres up to 64 mm wide.

- Single-sided bike rack for secure and comfortable parking
- 350mm wheel space suitable for bikes
- Single-sided or double-sided parking options available
- Durable, corrosion-protected steel construction
- Easy self-assembly with optional ground anchors and mounting brackets

Technical Data

R&R Item Number	RR102554
EAN / GTIN	7350168266132
Product Type	Bike Rack
Height	720 mm
Length	700 mm
Depth	456 mm
Weight	8,3 kg
Color	Silver
Material	Steel
Configuration	One-sided
Parking Spaces	2 bikes
Bicycle Spaces	350 mm
Maximum Tyre Width	64 mm
Surface	Hot-dip galvanised
Mounting Type	Floor mounting

Scan Me

The completeness and accuracy of the data and illustrations cannot be guaranteed.
Specifications subject to change without notice. Verify critical dimensions on the site before installation and ordering

R&R Solutions AB
434 37 Kungsbacka, Sweden
www.rr-solutions.se
info@rr-solutions.se

R&R NORDIC
YOUR SMART SOLUTIONS