Bicycle Parking Solutions

Bike Rack Premium R46S for 2 Bikes



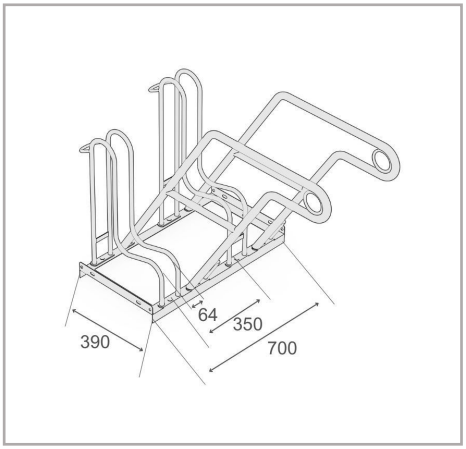

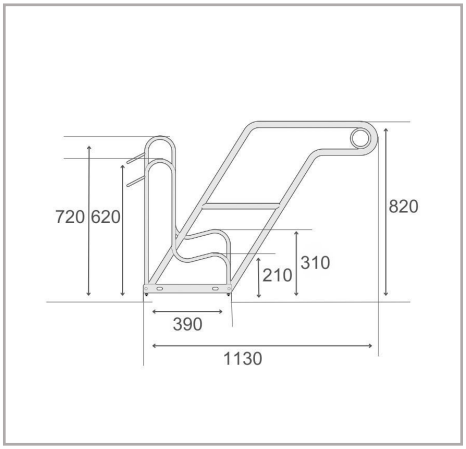

The Bike Rack Premium R46S is a robust and versatile solution for bicycle parking, perfect for urban areas, workplaces, or private premises. Built with a free-standing, bolted tubular steel construction, this rack is
designed for durability and stability, ensuring reliable performance even in busy environments. The vertical-format parking hoops are crafted to keep bicycles securely upright, accommodating various styles, including mountain bikes and e-bikes. The alternating low/high settings help save valuable parking space, making it a versatile solution for tight areas. It allows for both single-sided and double-sided parking, providing flexibility for different needs. Additionally, the system is prefabricated for easy row or series connection. This makes it simple to expand
the parking capacity as needed.

- Single-sided bike rack for secure and comfortable parking
- Secure vertical parking hoops and comfortable frame rests
- 350mm wheel space suitable for bikes
- Fits tires up to 64 mm wide
- Steel eyelets for optimized theft protection
- Durable, corrosion-protected steel construction
- Space-saving low/high configuration

Technical Data

R&R Item Number	RR102564
EAN / GTIN	7350168266330
Product Type	Bike Rack
Height	820 mm
Length	700 mm
Depth	1130 mm
Weight	15,1 kg
Color	Silver
Material	Steel
Configuration	One-sided
Parking Spaces	2 bikes
Bicycle Spaces	350 mm
Maximum Tyre Width	64 mm
Surface	Hot-dip galvanised
Mounting Type	Floor mounting

Scan Me

The completeness and accuracy of the data and illustrations cannot be guaranteed.
Specifications subject to change without notice. Verify critical dimensions on the site before installation and ordering

R&R Solutions AB
434 37 Kungsbacka, Sweden
www.rr-solutions.se
info@rr-solutions.se

R&R NORDIC
YOUR SMART SOLUTIONS