Bicycle Parking Solutions

Bike Rack Premium R45S for 2 Bikes

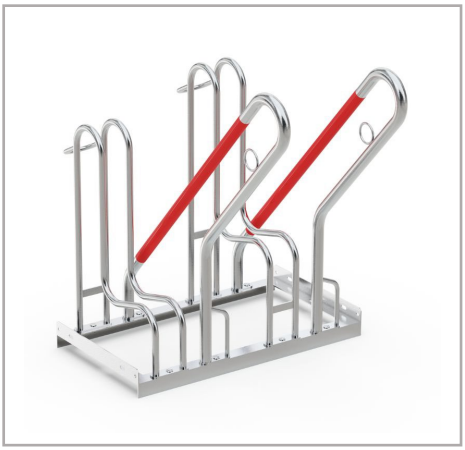

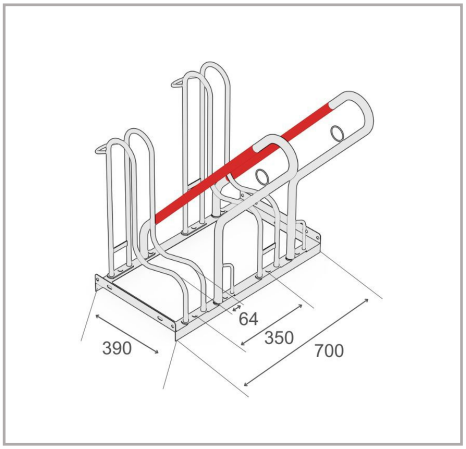

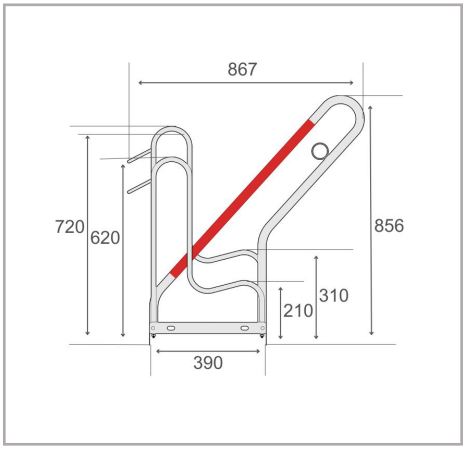

The Bike Rack Premium R45S is a free-standing bicycle parking system designed for secure, efficient parking of mountain bikes, e-bikes, and other high-quality bicycles. It features vertical parking hoops and rubber-sheathed frame rests to protect bikes from scratches and damage, along with integrated steel eyelets for easy lock-securing and theft prevention. Alternating low/high settings save valuable parking space, while single- or double-sided configurations offer flexibility for different needs. The system is prefabricated for easy row or series connection, making it simple to expand capacity as needed.

- Single-sided bike rack for secure and comfortable parking
- Vertical parking hoops and rubber-sheathed frame rests
- 350mm wheel space suitable for bikes
- Fits tyres up to 64 mm wide
- Steel eyelets for optimized theft protection
- Durable, corrosion-protected steel construction
- Prepared for floor mounting and row connection

Technical Data

R&R Item Number	RR102678
EAN / GTIN	7350168266279
Product Type	Bike Rack
Height	856 mm
Length	700 mm
Depth	867 mm
Weight	13,8 kg
Color	Silver
Material	Steel
Configuration	One-sided
Parking Spaces	2 bikes
Bicycle Spaces	350 mm
Maximum Tyre Width	64 mm
Surface	Hot-dip galvanised
Mounting Type	Floor mounting

Scan Me

The completeness and accuracy of the data and illustrations cannot be guaranteed.
Specifications subject to change without notice. Verify critical dimensions on the site before installation and ordering

R&R Solutions AB
434 37 Kungsbacka, Sweden
www.rr-solutions.se
info@rr-solutions.se

R&R NORDIC
YOUR SMART SOLUTIONS