Bicycle Parking Solutions

Bike Rack Premium R26W for 6 Bikes

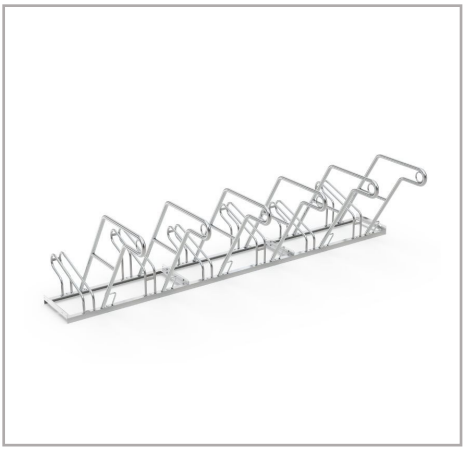

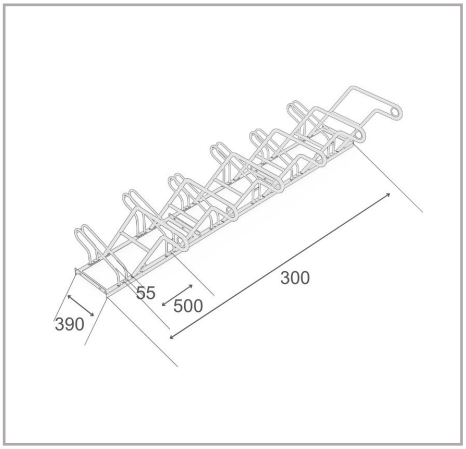

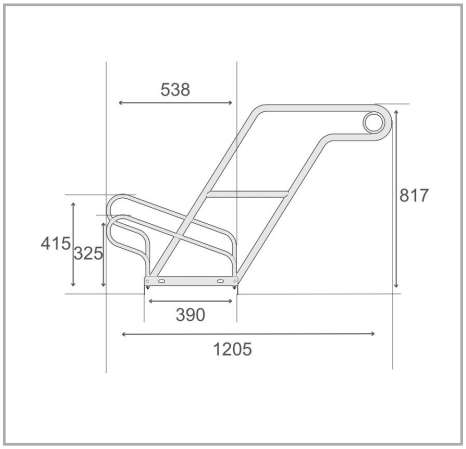

The Bike Rack Premium R26W is a robust, free-standing bicycle parking system designed to offer bothsecurity and convenience. Featuring a waist-high horizontal frame rest, this bike rack provides users with acomfortable way to park their bikes without worrying about the bike buckling or falling over. The alternating low/high settings help save valuable parking space, making it a versatile solution for tight areas. It allows for both single-sided and double-sided parking, providing flexibility for different needs. Additionally, the system is prefabricated for easy row or series connection. This makes it simple to expand the parking capacity as needed.

- Single-sided bike rack for secure and comfortable parking
- High horizontal frame rests to prevent falling overs
- 500mm wheel space suitable for bikes
- Steel eyelets for optimized theft protection
- Durable, corrosion-protected steel construction
- Prefabricated for easy row/serial connection

Technical Data

R&R Item Number	RR103011
EAN / GTIN	7350168266507
Product Type	Bike Rack
Height	817 mm
Length	3000 mm
Depth	1205 mm
Weight	42,9 kg
Color	Silver
Material	Steel
Configuration	One-sided
Parking Spaces	6 bikes
Bicycle Spaces	500 mm
Maximum Tyre Width	55 mm
Surface	Hot-dip galvanised
Mounting Type	Floor mounting

Scan Me

The completeness and accuracy of the data and illustrations cannot be guaranteed.
Specifications subject to change without notice. Verify critical dimensions on the site before installation and ordering

R&R Solutions AB
434 37 Kungsbacka, Sweden
www.rr-solutions.se
info@rr-solutions.se

R&R NORDIC
YOUR SMART SOLUTIONS