Bicycle Parking Solutions

Bike Rack Economy R4SD for 8 Bikes



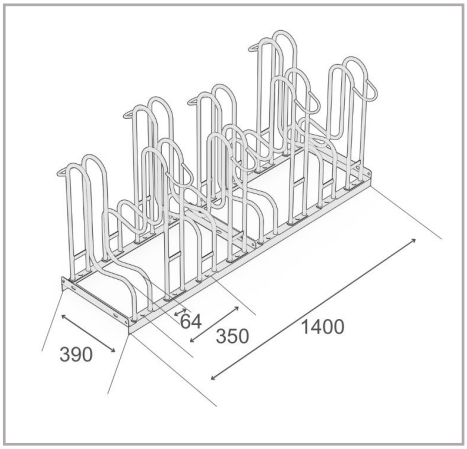

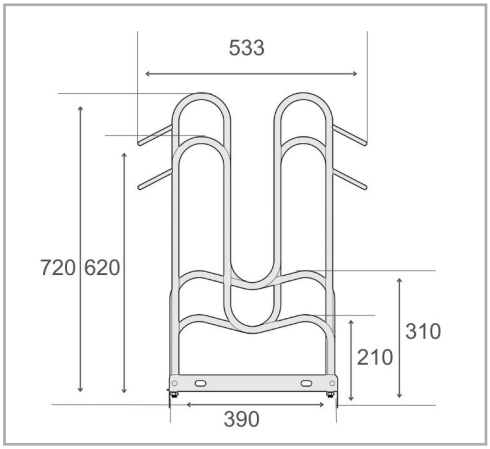

The Bike Rack Economy R4SD is designed for efficient bicycle parking with 350 mm spacing between bikes. The double-sided design allows bikes to be parked on both sides, making efficient use of available space. The low-high design allows handlebars to overlap and saves space. The rack can also be extended in a row using connecting elements to create additional parking spaces. It is made from durable, corrosion-protected steel and is suitable for tyres up to 64 mm wide.

- Double-sided bike rack for secure and comfortable parking
- 350mm wheel space suitable for bikes
- Single-sided or double-sided parking options available
- Durable, corrosion-protected steel construction
- Easy self-assembly with optional ground anchors and mounting brackets

Technical Data

R&R Item Number	RR103053
EAN / GTIN	7350168266194
Product Type	Bike Rack
Height	720 mm
Length	1400 mm
Depth	533 mm
Weight	27 kg
Color	Silver
Material	Steel
Configuration	Two-sided
Parking Spaces	8 bikes
Bicycle Spaces	350 mm
Maximum Tyre Width	64 mm
Surface	Hot-dip galvanised
Mounting Type	Floor mounting

Scan Me

The completeness and accuracy of the data and illustrations cannot be guaranteed.
Specifications subject to change without notice. Verify critical dimensions on the site before installation and ordering

R&R Solutions AB
434 37 Kungsbacka, Sweden
www.rr-solutions.se
info@rr-solutions.se

R&R NORDIC
YOUR SMART SOLUTIONS