Bicycle Parking Solutions

Bike Rack Premium R50WD for 12 Bikes

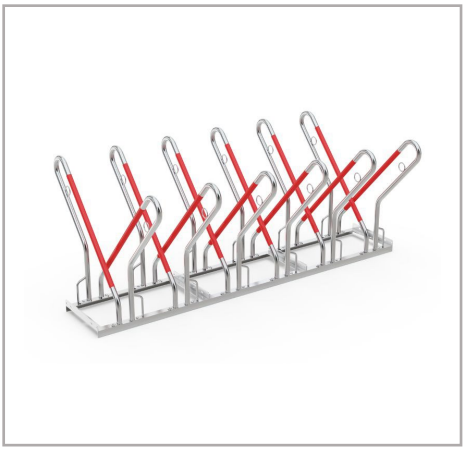

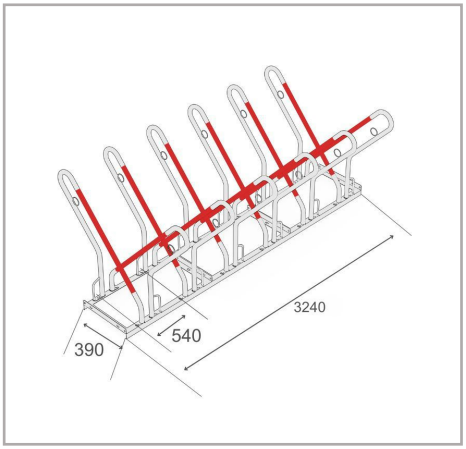

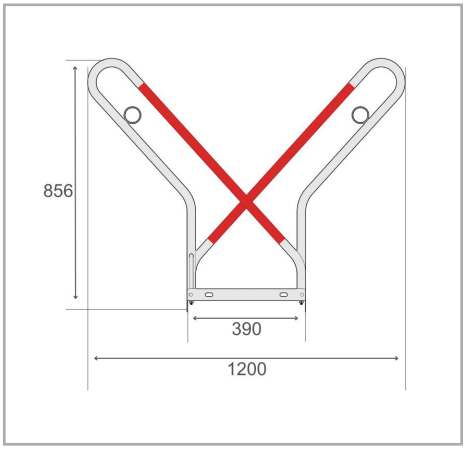

The Bike Rack Premium R50WD offers a highly durable and secure solution for parking bicycles. Its robust teel frame, coated with a rust-resistant finish, ensures long-lasting use even in outdoor environments. The supporting brackets of the Bike Rack Premium R50WD come with a shock-absorbing rubber covering it in a bright red color. This rubber layer acts as an impact protector, helping prevent bicycles from getting scratched or damaged in case of accidental bumps or falls. The visible red rubber also makes the bike rack easy to spot, increasing awareness and safety in busy areas. The Bike Rack Premium R50W is also designed for easy expansion. It comes pre-configured for simple row connections, meaning you can easily add more racks to create a larger bike parking area. Installation is straightforward thanks to the included set of two ground mounting brackets and a clear set of instructions. Whether you need to mount it to the ground in a fixed position or create an expandable row of bike racks, this model offers both simplicity and flexibility in installation.

- Double-sided bike rack for secure and comfortable parking
- Rubber covering hoops for shock protection in bright red
- 540mm wheel space suitable for bikes
- Steel eyelets for optimized theft protection
- Durable, corrosion-protected steel construction
- Designed for easy row extension

Technical Data

R&R Item Number	RR103075
EAN / GTIN	7350168260000
Product Type	Bike Rack
Height	856 mm
Length	3240 mm
Depth	1200 mm
Weight	42 kg
Color	Silver
Material	Steel
Configuration	Two-sided
Parking Spaces	12 bikes
Bicycle Spaces	540 mm
Maximum Tyre Width	-
Surface	Hot-dip galvanised
Mounting Type	Floor mounting

Scan Me

The completeness and accuracy of the data and illustrations cannot be guaranteed.
Specifications subject to change without notice. Verify critical dimensions on the site before installation and ordering

R&R Solutions AB
434 37 Kungsbacka, Sweden
www.rr-solutions.se
info@rr-solutions.se

R&R NORDIC
YOUR SMART SOLUTIONS