Bicycle Parking Solutions

# Bike Rack Economy R4WD for 10 Bikes

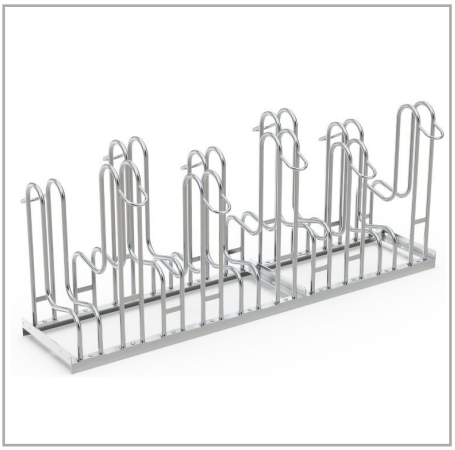

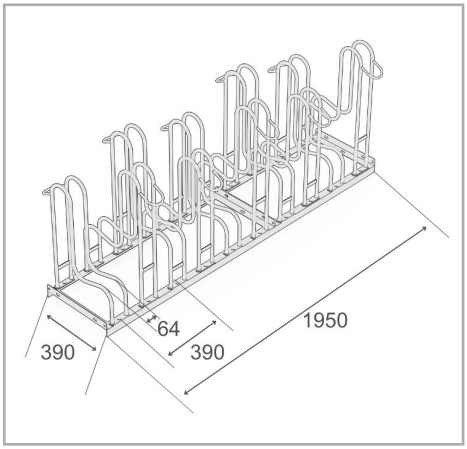


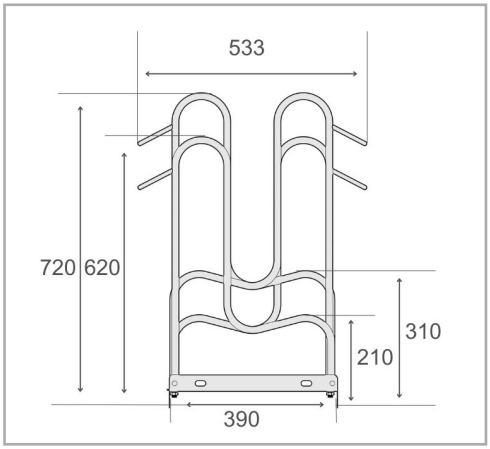


The Bike Rack Economy R4WD is designed for comfortable bicycle parking with 390 mm spacing between bikes. The double-sided design allows bikes to be parked on both sides, with extra space between bicycles. The low-high design allows handlebars to overlap and saves space. The rack can also be extended in a row using connecting elements to create additional parking spaces. It is made from durable, corrosion-protected steel and is suitable for tyres up to 64 mm wide.

- Double-sided bike rack for secure and comfortable parking
- 390 mm wheel space suitable for bikes
- Single-sided or double-sided parking options available
- Durable, corrosion-protected steel construction
- Easy self-assembly with optional ground anchors and mounting brackets

## Technical Data

| | |
|---|---|
| R&R Item Number | RR103283 |
| EAN / GTIN | 7350168269416 |
| Product Type | Bike Rack |
| Height | 720 mm |
| Length | 1950 mm |
| Depth | 533 mm |
| Weight | 29,3 kg |
| Color | Silver |
| Material | Steel |
| Configuration | Two-sided |
| Parking Spaces | 10 bikes |
| Bicycle Spaces | 390 mm |
| Maximum Tyre Width | 64 mm |
| Surface | Hot-dip galvanised |
| Mounting Type | Floor mounting |

Scan Me

The completeness and accuracy of the data and illustrations cannot be guaranteed.
Specifications subject to change without notice. Verify critical dimensions on the site before installation and ordering

R&R Solutions AB
434 37 Kungsbacka, Sweden
www.rr-solutions.se
info@rr-solutions.se

R&R NORDIC
YOUR SMART SOLUTIONS