Bicycle Parking Solutions

Bike Rack Economy R2S for 2 Bikes



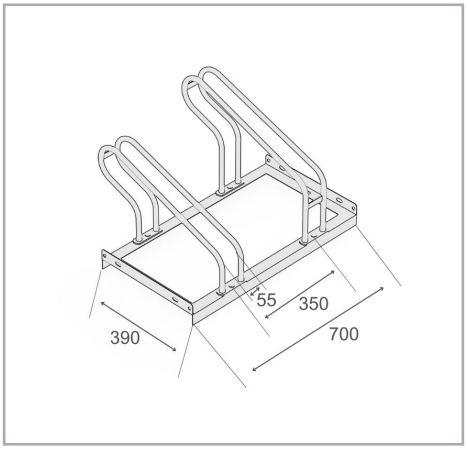

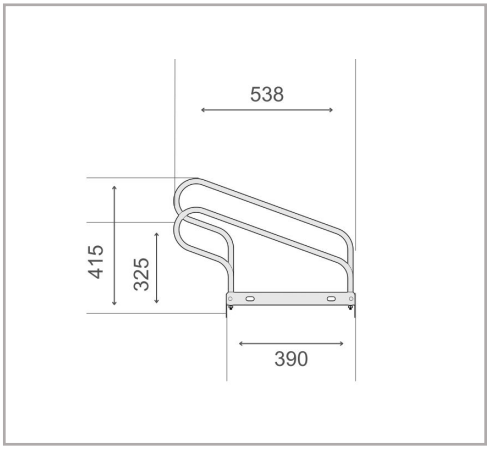

The Bike Rack Economy R2S is designed to meet the growing demand for parking solutions compatible with wider handlebar. This bike rack offers a comfortable 350mm spacing between wheels, ensuring ample room for your bikes to be parked securely without overcrowding. To maximize the use of available space, the system offers a low-high design or the option for single or double-sided parking. This flexibility makes it ideal for a variety of environments, from residential to commercial setups.

- Single-sided bike rack for secure and comfortable parking
- 350mm wheel space suitable for bikes
- Single-sided or double-sided parking options available
- Durable, corrosion-protected steel construction
- Easy self-assembly with optional ground anchors and mounting brackets

Technical Data

R&R Item Number	RR102535
EAN / GTIN	7350168266002
Product Type	Bike Rack
Height	415 mm
Length	700 mm
Depth	538 mm
Weight	6,8 kg
Color	Silver
Material	Steel
Configuration	One-sided
Parking Spaces	2 bikes
Bicycle Spaces	350 mm
Maximum Tyre Width	55 mm
Surface	Hot-dip galvanised
Mounting Type	Floor mounting

Scan Me

The completeness and accuracy of the data and illustrations cannot be guaranteed.
Specifications subject to change without notice. Verify critical dimensions on the site before installation and ordering

R&R Solutions AB
434 37 Kungsbacka, Sweden
www.rr-solutions.se
info@rr-solutions.se

R&R NORDIC
YOUR SMART SOLUTIONS