Bicycle Parking Solutions

# Bike Rack Economy R2WD for 10 Bikes

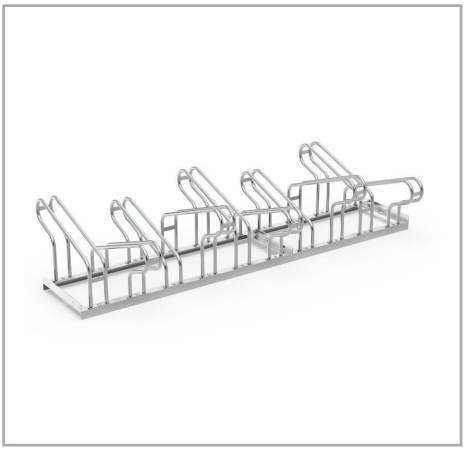

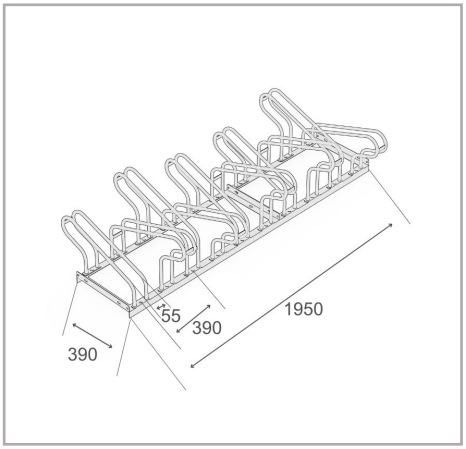


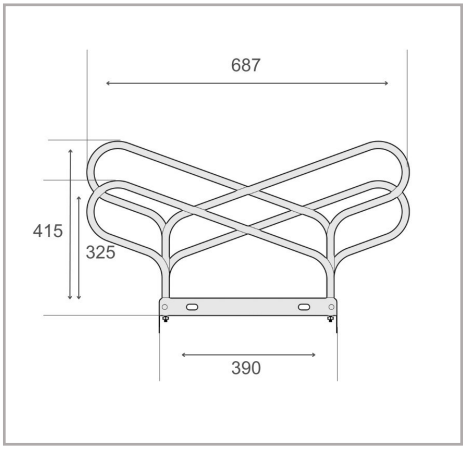


The Bike Rack Economy R2WD is designed to meet the growing demand for parking solutions compatible with wider and wider handlebar. This bike rack offers a comfortable 390mm spacing between wheels, ensuring ample room for your bikes to be parked securely without overcrowding. To maximize the use of available space, the system offers a low-high design or the option for single or double-sided parking. This flexibility makes it ideal for a variety of environments, from residential to commercial setups.

- Double-sided bike rack for secure and comfortable parking
- 390mm wheel space suitable for bikes
- Single-sided or double-sided parking options available
- Durable, corrosion-protected steel construction
- Easy self-assembly with optional ground anchors and mounting brackets

## Technical Data

| | |
|---|---|
| R&R Item Number | RR103047 |
| EAN / GTIN | 7350168266941 |
| Product Type | Bike Rack |
| Height | 415 mm |
| Length | 1560 mm |
| Depth | 687 mm |
| Weight | 21,2 kg |
| Color | Silver |
| Material | Steel |
| Configuration | Two-sided |
| Parking Spaces | 8 bikes |
| Bicycle Spaces | 390 mm |
| Maximum Tyre Width | 55 mm |
| Surface | Hot-dip galvanised |
| Mounting Type | Floor mounting |

Scan Me

The completeness and accuracy of the data and illustrations cannot be guaranteed.
Specifications subject to change without notice. Verify critical dimensions on the site before installation and ordering

R&R Solutions AB
434 37 Kungsbacka, Sweden
www.rr-solutions.se
info@rr-solutions.se

R&R NORDIC
YOUR SMART SOLUTIONS