Bicycle Parking Solutions

Bike Rack Premium R25WD for 8 Bikes

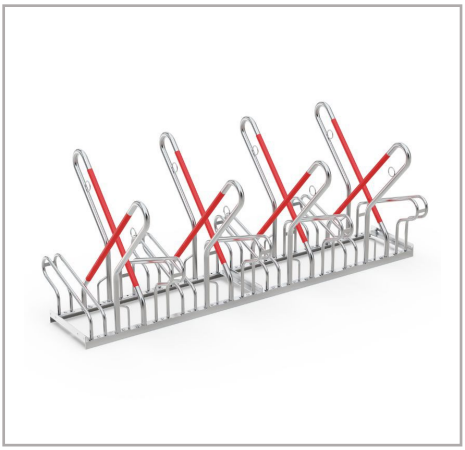

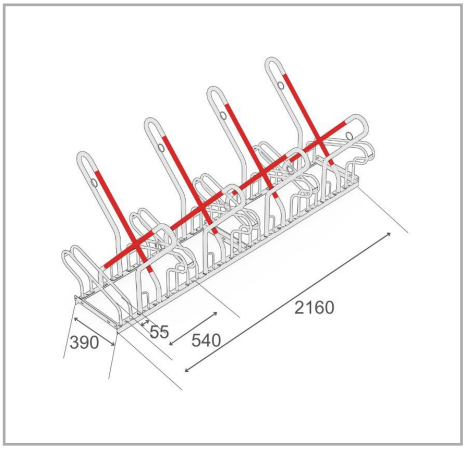

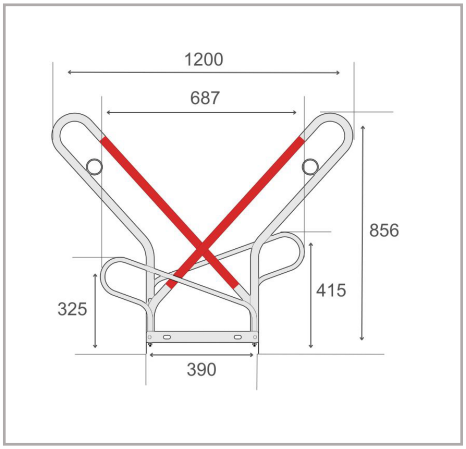

The Bike Rack Premium R25WD is a self-standing bike rack designed for secure storage. Its signal red rubber-coated angled brackets protect bikes from tipping and rim damage, while rubber-sheathed frame rests prevent scratches. The rack accommodates tire widths up to 55mm and wheel spacings of 500mm. Designed for floor mounting and row connection, the R25WD can be easily extended or installed in series for larger parking areas — making it a space-efficient solution suited to office, residential, and commercial environments.

- Double-sided bike rack for secure and comfortable parking
- Angled leaning rubber-sheathed brackets 540mm wheel space suitable for bikes
- Steel eyelets for optimized theft protection
- Durable, corrosion-protected steel construction
- Prepared for floor mounting and row connection

Technical Data

R&R Item Number	RR103062
EAN / GTIN	7350168266767
Product Type	Bike Rack
Height	856 mm
Length	2160 mm
Depth	1200 mm
Weight	45,5kg
Color	Silver
Material	Steel
Configuration	Two-sided
Parking Spaces	8 bikes
Bicycle Spaces	540 mm
Maximum Tyre Width	55 mm
Surface	Hot-dip galvanised
Mounting Type	Floor mounting

Scan Me

The completeness and accuracy of the data and illustrations cannot be guaranteed.
Specifications subject to change without notice. Verify critical dimensions on the site before installation and ordering

R&R Solutions AB
434 37 Kungsbacka, Sweden
www.rr-solutions.se
info@rr-solutions.se

R&R NORDIC
YOUR SMART SOLUTIONS