Bicycle Parking Solutions

Bike Rack Economy R96 for 2 bikes with Crossbar – Set in Concrete



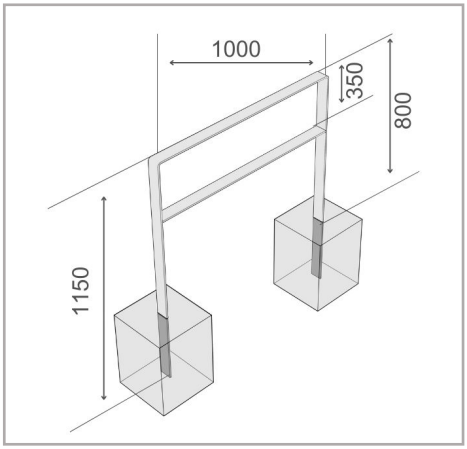

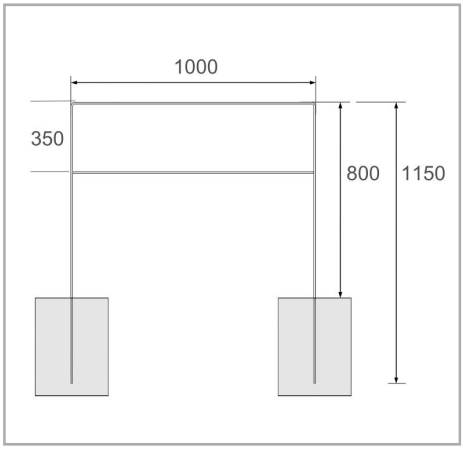

The Bicycle Rack Economy R96 is a strong and modern double-sided bike rack designed for secure bicycle parking. It is made from 60 mm wide and 10 mm thick flat steel with a durable hot-dip galvanised finish for long-term outdoor use. The R96 is suitable for bicycles of different types and sizes and can be installed by setting in concrete or using a base plate with bolts. It is available with or without a knee-high crossbar.

- Accommodates 2 bikes securely
- Heavy-duty galvanised steel construction
- Made from 60 × 10 mm flat steel
- Suitable for all types and sizes of bicycles
- Leaning and locking brackets for secure parking
- Knee-high crossbar for additional strength
- Designed to install in concrete

Technical Data

R&R Item Number	RR103301
EAN / GTIN	7350168269294
Product Type	Bike Rack
Height	1150 mm
Length	1000 mm
Depth	60 mm
Weight	20,1kg
Color	Silver
Material	Steel
Configuration	Two-sided
Parking Spaces	2 bikes
Surface	Hot-dip galvanised
Mounting Type	Set in concrete

Scan Me

The completeness and accuracy of the data and illustrations cannot be guaranteed.
Specifications subject to change without notice. Verify critical dimensions on the site before installation and ordering

R&R Solutions AB
434 37 Kungsbacka, Sweden
www.rr-solutions.se
info@rr-solutions.se

R&R NORDIC
YOUR SMART SOLUTIONS